Think Hygiene™
Intercare Cleaning and Hygiene Services Pvt.Ltd

PRESTIGE SERIES

# JUMBO TOILET PAPER DISPENSERS

**Dimensions**

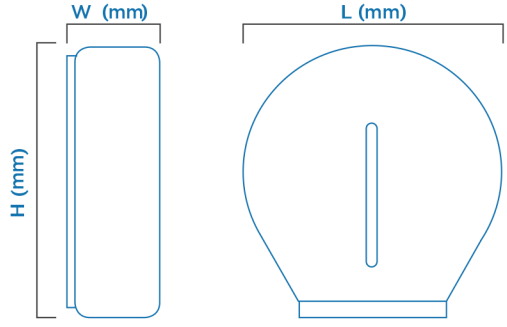


Large :336 (L) x 122 (W) x 356 (H)

Small :245 (L) x 111 (W) x 265 (H)

**Roll Paper Dimensions**

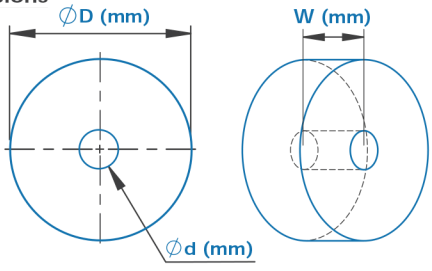


Large Rulo :260 (D) x 100 (W) x 58 (d)

Small Rulo :180 (D) x 100 (W) x 58 (d)

Reflex Rulo :190 (D) x 110 (W)

**Reflex :**

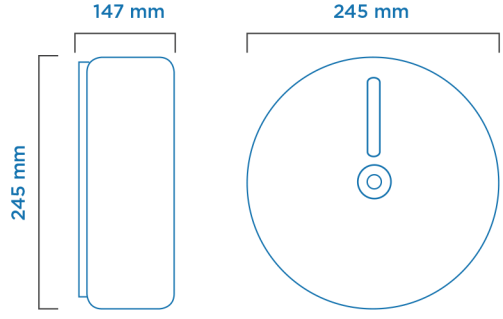


| Type | Large | Small | Reflex |
|---|---|---|---|
| Item No | 913042 | | 913030 |
| Barkode No | 8697461912489 | 8697461912496 | 8697461915589 |
| Colour | White | | |
| Plastic Material | ABS | | |
| Mounting Type | Wall mount | | |
| Packaging Dimensions* (mm) | 339 (l) x 125 (w) x 362 (h) | 248 (l) x 125 (w) x 271 (h) | 252 (l) x 160 (w) x 254 (h) |
| Gross Weight (kg) | 1,70 | 1,10 | 1,23 |
| Net Weight (kg) | 1,49 | 0,93 | 1,06 |
| Case Quantity (pcs.) | 1 | | |

*Dimensions: l: Length, w: Width, h: Height

ALWAYS CLEAN.
ALWAYS FRESH.

**Head Office, New Delhi:**
C-127, Naraina Industrial Area, Phase-1
New Delhi, India 110028
Tel: +91 11 2589 5155, +91 97 1117 9151
+91 97 1117 9153