Think Hygiene™
Intercare Cleaning and Hygiene Services Pvt.Ltd

AROMA DIFFUSER

SMART PRO

Dimensions

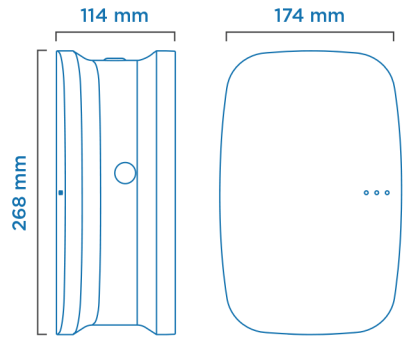

Compatible Cartridge

Volume
50 ml

White

Black

Type	Pro	
Item No	921220	
Barkode	8697461916975	8697461916999
Colour	White	Black
Plastic Material	PP	
Mounting Type	Wall mount or used on a flat surface	
Packaging Dimensions* (mm)	240 (l) x 140 (w) x 333 (h)	
Gross Weight (kg)	1,45	
Net Weight (kg)	1,70	
Coverage (m3)	Up to 450	
Aroma Cartridge Volume (ml)	180	
Operation	Programable., With Aroma Oils ID System., Adjustable odorizing settings	
Power (W)	5	
Power supply	220 – 240 V AC 50/60 Hz	
Case Quantity (pcs.)	1	

*Dimensions: l: Length, w: Width, h: Height

ALWAYS CLEAN.
ALWAYS FRESH.

Head Office, New Delhi:
C-127, Naraina Industrial Area, Phase-1
New Delhi, India 110028
Tel: +91 11 2589 5155, +91 97 1117 9151
+91 97 1117 9153